Part No. ALL60025

Upper Control Arm Brackets

Stamped, 3/16" thick mild steel brackets weld to chassis to provide a mounting point for the upper control arm. Brackets are sold in pairs and have two 5/8" mounting holes, spaced 13/16" apart for adjustment. May be trimmed to desired height.



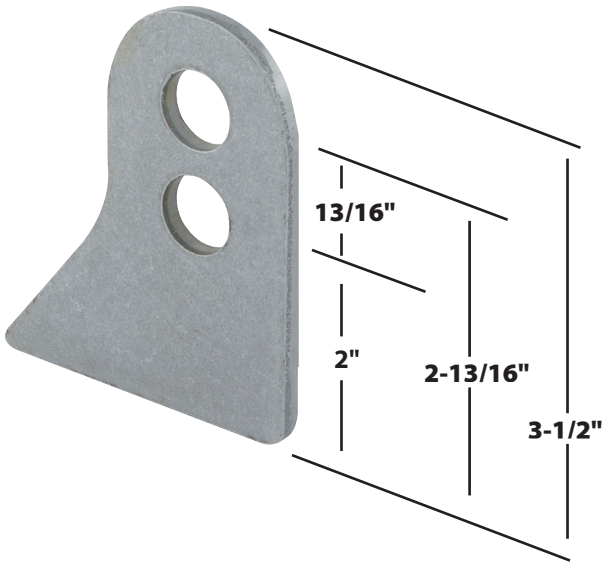

REV071425

Allstar Performance 8300 Lane Dr., Watervliet, MI 49098
Phone: (269) 463-8000 Fax: (800) 772-2618 www.allstarperformance.com